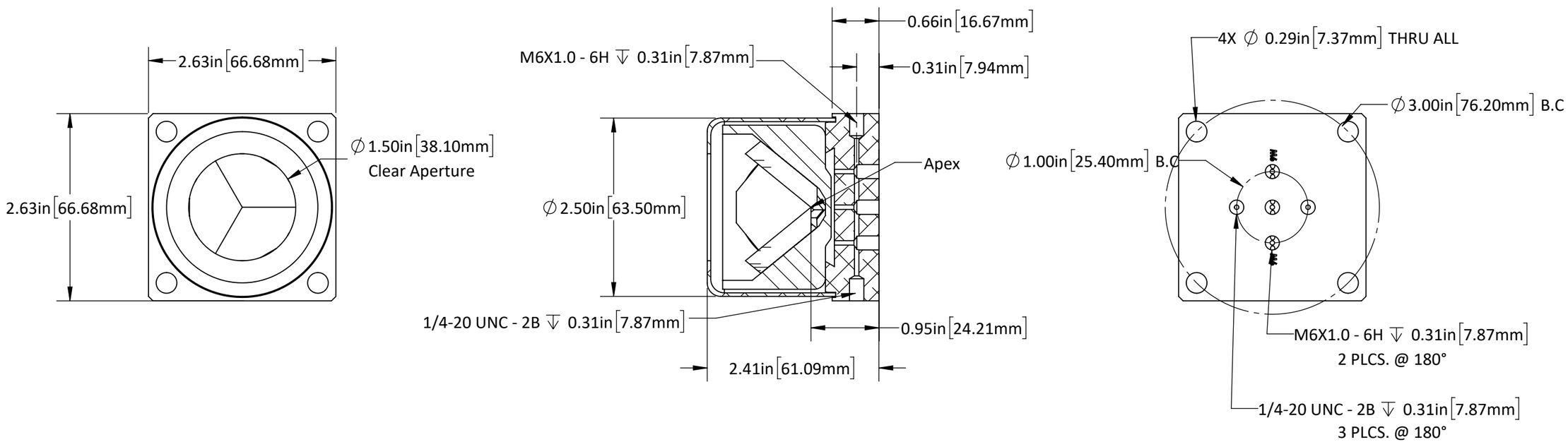

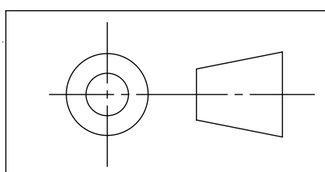

UNLESS OTHERWISE SPECIFIED
DIMENSIONS ARE IN INCHES
TOLERANCES ARE:

FRACTIONS	DECIMALS	ANGLES
± 1/16"	± XX .030" ± XXX .010"	± 1'

PLX
INNOVATIVE OPTICAL SYSTEMS

Ø1.50" Clear Aperture
Omniwave Hollow
Retroreflector Assembly

OW-15

PROPRIETARY NOTICE

THIS DRAWING AND THE ITEMS DEPICTED HEREIN ARE THE PROPERTY OF PLX INC. THEY ARE FURNISHED FOR EVALUATION PURPOSES ONLY AND SHALL NOT BE DISCLOSED OR DUPLICATED OR USED FOR ANY COMMERCIAL PURPOSES WITHOUT THE EXPRESS WRITTEN CONSENT OF PLX INC.